City of Brentwood
Planning and Codes Department
5211 Maryland Way (37027)
P.O. Box 788
Brentwood, TN 37024-0788

Office Hours: Monday-Friday 7:30a.m. - 4:30p.m.
Office: (615) 371-2204
Fax: (615) 371-2233
Inspection Request Line (615) 661-7077

Please visit our website at: www.brentwood-tn.org for additional information including downloadable applications and documents.

State of Tennessee Electrical & Low Voltage
State Electrical Inspection Request Line (615) 577-6161
State Electrical Permit Issuance (615) 577-6160

COMMERCIAL CONSTRUCTION CITY INSPECTION PROCESS

UPDATED JANUARY 1, 2013

City of Brentwood

COMMERCIAL CONSTRUCTION CITY INSPECTION PROCESS

UPDATED JANUARY 1, 2013

NOTES

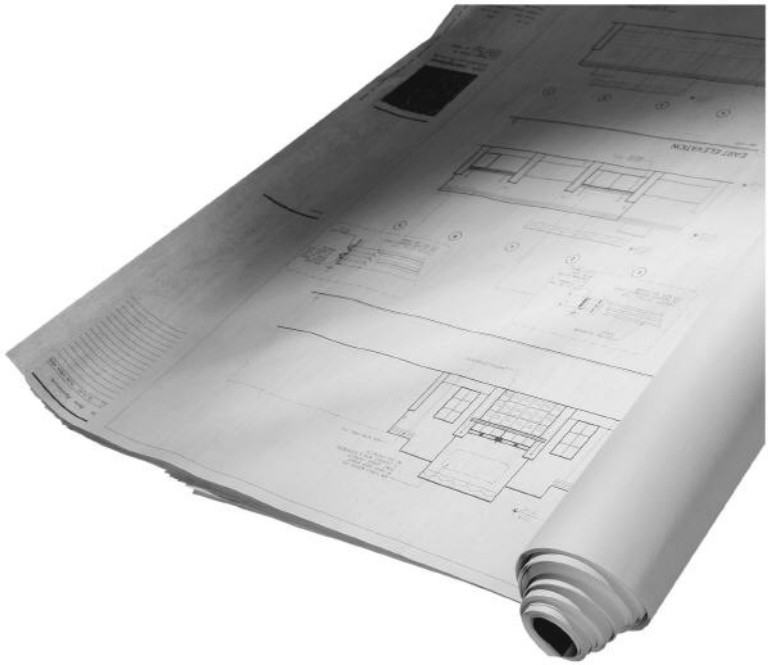

THIS REFERENCE COMPILED BY THE CITY IS NOT INTENDED TO BE AN ALL INCLUSIVE LIST.

THE ADOPTED BUILDING CODE OF THE CITY OF BRENTWOOD IS THE REQUIREMENT FOR ALL COMMERCIAL PROJECTS.

GRADING PERMIT

The terrain of the region challenges many developers when building on our moderate and steep grades. Land disturbance and other forms of site excavation can contribute to the degradation of land surfaces and streams.

Associated problems include erosion, siltation, earth slides, dusty conditions, clogged storm sewers, additional road maintenance costs, increased water runoff, and localized flooding. To prevent such problems, **all commercial lots shall receive special review by the Engineering Department**. A special land disturbance plan shall be developed to address grading, erosion control, and sediment trapping at the construction site. The plan shall also identify final stabilized conditions for the site.

The City Engineer will review commercial lot issues prior to any associated permitting (615-371-0080). Be sure to contact the Engineering Department for early guidance.

Table of Contents

	Page
ADOPTED COMMERCIAL CODES	4
INSPECTION PROCESS FOR COMMERCIAL PROJECTS - GENERAL INFORMATION	5
PRINCIPAL CITY INSPECTIONS:	6
FOUNDATION INSPECTION	6
SLAB INSPECTION	7
ROUGH-IN INSPECTIONS (FRAMING, PLUMBING, MECHANICAL AND INSULATION)	8
ELECTRICAL INSPECTIONS	9
WATER & SEWER INSPECTION	10
FINAL INSPECTION	11
LIFE SAFETY INSPECTION	12
TEMPORARY CERTIFICATE OF OCCUPANCY	13
EROSION CONTROL PRACTICES	13
GRADING PERMIT	14
DISCLAIMER	15
BACK COVER-CONTACT INFORMATION	16

THE CONTENT OF THIS DOCUMENT IS NOT ALL INCLUSIVE

ADOPTED COMMERCIAL CODES

- 2012 International Building Code (ICC)
- 2012 International Plumbing Code (ICC)
- 2012 International Mechanical Code (ICC)
- 2012 International Fuel Gas Code (ICC)
- 2009 International Energy Conservation Code (ICC)
- 2009 Edition NFPA 1 & NFPA 101 and all referenced publications (fire code)
- 2008 National Electrical Code (NEC)
- City of Brentwood 'Special Guidelines for Electrical Installation'
- 2010 ADA Standards for Accessible Design & ICC A117.1-2009/ Chapter 11-IBC

In any conflict between building and fire codes applied to commercial and service institutional construction, the stricter standard shall apply (as per Municipal Code Section 26-67).

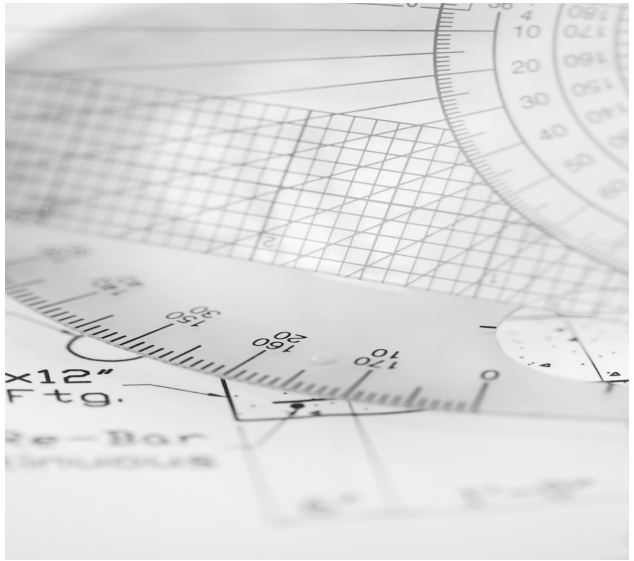

Temporary Certificate of Occupancy

A temporary certificate of occupancy may be granted by the Planning & Codes Department, however, approval is required by all departments involved. (Building, Planning, Engineering & Fire) It is the responsibility of the applicant to contact departments well in advance when a temporary certificate of occupancy is needed. A $2,000.00 fee is required for the issuance of a temporary certificate of occupancy. Upon re-inspection and issuance of full certificate of occupancy, a sum of $1,500.00 will be refunded to the applicant that originally paid the fee if all outstanding items are resolved within 60 -days of issuance of the temporary certificate of occupancy.

Erosion Control Practices

All properties adjacent to and/or downhill from a construction site shall be protected from soil erosion and sedimentation. This shall be accomplished by preserving a well-vegetated buffer strip around the lower perimeter of the land disturbance or by installing perimeter controls such as sediment barriers, filters or dikes, or sediment basins, or by a combination of such measures. **Erosion control is to be in place before grading and/or permit issuance. Only staked hay bales and siltation fences properly installed will be accepted. It is important that Contractors consult with the Engineering Department on proper erosion control, prior to the start of construction. (615) 371-0080**

Stormwater runoff from disturbed areas five (5) acres or greater shall pass through a sediment basin or other suitable sediment trapping facility. All storm drainage inlets shall be protected during construction with a sediment barrier to prevent clogging and localized flooding.

*****In every building or structure, means of egress shall be so maintained as to provide free and unobstructed egress from all parts of the building or structure at all times, and so as to be available for full instant use in case of fire or other emergency. The means of egress shall be maintained in such a way that the building occupant can depend upon it when an emergency occurs.

*The installation shall be subject to an acceptance test before final approval and acceptance of fire suppression, alarm, detection or any other fire protection device, including standby power facilities and fire ventilation systems. These tests shall be adequate to determine that the system or fire protection device has been properly installed and will function as intended.

It shall be unlawful to occupy within portions of a structure until the required fire protection systems within that portion of the structure have been tested. All Planning & Codes, Fire, and Engineering Department requirements shall be resolved prior to issuance of the Certificate of Occupancy.

Cross Connection prevention devices shall be installed on all commercial buildings, irrigation systems and fire suppression systems connected to the public water supply. The devices shall be permitted and tested on installation and tested annually thereafter by the City of Brentwood Water & Sewer Department.

Life Safety Inspection

Items listed under the Final Inspection Section with an asterisk (*) are the requirements for a life safety inspection. A life safety inspection allows stock items and furniture to be placed into space under construction. **A life safety inspection does not allow occupancy.**

INSPECTION PROCESS FOR COMMERCIAL PROJECTS

The City of Brentwood has compiled this reference to provide a brief overview of the City inspection process for commercial construction. The guide assists contractors, architects, superintendents, and trades people conducting work in the City of Brentwood. **Please use this checklist prior to calling in a commercial inspection request.**

Though the guide provides an overview of our inspection process, the format can not provide a comprehensive listing of all code issues that may affect any given commercial project. Construction professionals should secure a copy of the adopted codes for the City of Brentwood. Copies of the codes can be easily secured from the sponsoring code organizations. Most are available via ICC (International Code Council) at 1-888-422-7233 or www.iccsafe.org.

General Information – City building inspectors will conduct both routine and required inspections during construction of the project. It is the responsibility of the general contractor or permit holder to call the:

(1) Brentwood Building, Plumbing & Mechanical Section - Inspection Request Line at **(615) 661-7077** is available 24/7 to schedule the required inspection(s). Should more detailed questions arise, contact our inspection officials at (615) 371-2204;

(2) Electrical inspection requests call: State Electrical Inspector at **(615) 577-6161**, to schedule electrical and low voltage inspections.

Typical inspections include footings/foundations, slab, rough-in (framing, plumbing, mechanical), insulation, water/sewer, storm/roof drains, above ceiling, life safety, hood test, fireline/sprinkler, and building final. **If a reinspection is required, an additional fee shall be paid before the re-inspection will be conducted. See electrical section for requirements of the State Fire Marshal's Office.**

Building Hours of Operation - Building activities are limited by city code to the hours between 7:00 am and dark on Monday through Saturday, and between 9:00 am and dark on Sunday. Emergency situations may allow a waiver from the Chief Building Official under certain guidelines not to exceed 30 days.

Project Posting - The applicant shall provide project identification by lot number and/or street address at the job site location. Identification shall be visible from the street or tenant entrance. A copy of approved plans shall be kept on the site or work area at the time of inspection(s). The permit holder or his agent shall also post the inspection record/ permit card on the job site in an accessible and conspicuous place to allow the inspectors to make required entries on the record. **No inspections will be performed unless all building, plumbing, mechanical, electrical, and low voltage permits are posted at the job site.**

Note: All inspections called in after 7:30 am will be scheduled for the following day. City Inspectors will coordinate with State Electrical Inspector commercial rough-in, above ceiling, life safety and final inspection types and complete inspections simultaneously . If an electrical inspection has not been requested from the State, no inspections will be completed by City Inspectors for the four listed inspections above.

PRINCIPAL CITY INSPECTIONS:

Foundation Inspection

Inspections for footings shall be made after piers or trenches are excavated, forms have been erected, and all reinforcing steel is in place. **The inspection shall occur before any deposit of concrete.** Foundation inspections shall include excavations for thickened slabs intended for the support of load bearing walls, partitions, structural supports, or equipment.

Note: Geotechnical reports including daily observations, concrete testing, rebar placement, compacting, footing data and post-tension field records are to be submitted to the Building Codes Department. Special inspections shall be documented and in accordance with IBC/Section 1705. Documentation is to be submitted as soon as available.

Final Inspection (Requirements for Issuance of Certificate of Occupancy)

"No building or structure shall be used or occupied, and no change in the existing occupancy classification of a building or structure until a certificate of occupancy has been issued."

Electrical final inspection is to be made after the building is complete, all required electrical fixtures are in place and properly connected, and the structure is ready for occupancy.

Plumbing final inspection is to be made after the building is complete, all plumbing fixtures are in place and properly connected, and the structure is ready for occupancy.

Mechanical final inspection is to be made after the building is complete, the mechanical system is in place and properly connected, and the structure is ready for occupancy.

Final Inspections - Helpful Notes:

*The means of egress, including the exit discharge, shall be illuminated at all times the building is occupied. All means of egress shall be illuminated by artificial lighting during the entire time a building is occupied, so that the paths of exit travel are always visible and available for evacuation for the occupants during emergencies. The means of egress illumination level shall not be less than one foot-candle (11 lux) at the floor level.

*Exits and exit access doors shall be marked by an approved exit sign readily visible from any direction of egress travel. Exit sign placement shall be such that no point in an exit access corridor is more than 100 feet, or the listed viewing distance for the sign, whichever is less, from the nearest visible exit sign.

Water & Sewer Inspection

The Codes Department will review and inspect all **gravity** sewer lines. The Codes Department **and the Water & Sewer Department** will inspect sewer services with **grinder pumps**. Both departments will inspect the grinder pump installation at the rough-in and final inspection. Contact the State Electrical Inspector if electrical work is involved.

Be sure to contact the Water & Sewer Department (615) 371-0080 for initial plan review and approval on grinder pump systems, grease traps and to schedule inspections during installation of such systems. Sanitary sewer systems exceeding 6” diameter lines requires the installation of manholes and inspected by the Water & Sewer Department.

Helpful Notes: Maintain five (5) feet separation between water and sewer lines. Be sure to satisfy the requirements for protection of pipes and plumbing system components. Also be aware of issues concerning trenching, excavating, back-fill and the size, location, installation, and maintenance of drainage pipe clean-out requirements. A clean-out is required at the property line; public/private connection. (Chapter 3 of the International Plumbing Code).

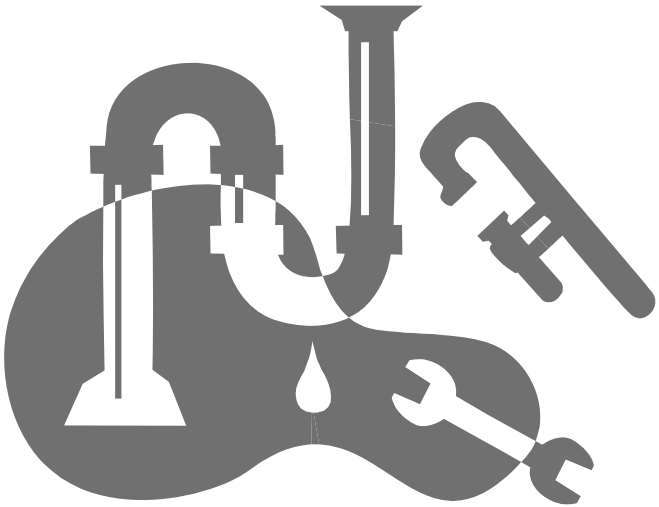

Slab Inspection

Prior to placement of concrete, a slab inspection shall be required for all plumbing and isolated pier footings located underneath concrete slab locations. Drain test: “Each section shall be filled with water to a point no less than 10 feet above the highest fitting connection in that section, or to the highest point in the completed system. Water shall be held in the section under test for 15 minutes before inspection. The system shall prove leak-free by visual inspection.

Rough-In Inspections (Framing, Plumbing, and Mechanical)

Rough-in framing, plumbing, mechanical, and **State electrical** (see also 'Insulation Inspection' below) inspections shall be made prior to covering and concealment. Finished roof shall be completed prior to rough-in inspection, and all framing, fire blocking, draft stopping and bracing shall be in place. **Gas service inspection** (15 psi for 15 minutes) shall be made after all new piping authorized by the building permit has been installed. **Water service inspection** (100 psi for 15 minutes) is performed on completion of the plumbing installation.

Note: City of Brentwood standards for this test exceed the International Plumbing Code requirements. Minimum pressure and maximum pressure standards shall be met on the installation. A 10-foot head test is required on all drain, waste and vent piping.

Insulation Inspection

The wall cavity insulation inspection occurs **after** the building, plumbing, mechanical and State electrical rough-in inspections have been completed and prior to concealment.

Note: Submit structural engineer's observation reports to the City of Brentwood on the erection of all structural assemblies. Report shall also state that work is in compliance with construction documents approved by the City of Brentwood. Provide as-built drawings for all structural issues not represented on approved drawings. All special inspection and structural test reports shall be documented in accordance with IBC/Section 1705 and provided to the Planning & Codes Department as soon as available.

Electrical Inspections

Electrical services cannot be provided to the customer until an approved electrical inspection is made. **The electrical power suppliers of the region require a rough-in inspection and a final inspection.** The City of Brentwood is served by both Nashville Electric Service (NES) and Middle Tennessee Electric Membership Corporation (MTEMC).

Note: Metering Rooms Per MTEMC-No electrical meter room will be allowed without prior approval.

All electrical and low voltage permits and inspections are completed through the State of Tennessee Fire Marshal's Office.

The City of Brentwood furnishes office space for State of Tennessee representatives for the convenience of residents, builders, and contractors. Electrical permits may be secured for any location in Williamson County, except within the city limits of Franklin, TN.

Bill Fox (615-577-6160) issues all electrical and low voltage permits; his office hours are 8 a.m. to 12 p.m., Monday through Friday.

After obtaining a permit, it is the responsibility of the permit holder to contact the **State Electrical Inspector** to arrange a field inspection.

Rough-in, life safety, above ceiling and final inspections shall be made simultaneously with City of Brentwood inspections.

After obtaining a permit, it is the responsibility of the permit holder to contact the State Electrical Inspector-Scott Mulligan to request an electrical inspection. Scott is in the office Monday through Friday from 8 am to 9 am and can be reached at **(615) 577-6161** or to request an inspection; automated line will pick up 24/7.